TABLE OF CONTENTS

ITEM#	DESCRIPTION	PAGE#
DPR2410	10' RADIUS DETECTABLE PLATE	Page : DP 3
DPR2415	15' RADIUS DETECTABLE PLATE	Page : DP 3
DPR2417	17.50' RADIUS DETECTABLE PLATE	Page : DP 4
DPR2420	20' RADIUS DETECTABLE PLATE	Page : DP 4
DPR2425	25' RADIUS DETECTABLE PLATE	Page : DP 5
DPR2430	30' RADIUS DETECTABLE PLATE	Page : DP 5
DPR2435	35' RADIUS DETECTABLE PLATE	Page : DP 6
DP2418	18" X 24" DETECTABLE PLATE	Page : DP 6
DP2424	24" X 24" DETECTABLE PLATE	Page : DP 7
DP2430	30" X 24" DETECTABLE PLATE	Page : DP 7

- All dimensions are in inch, [mm] unless noted otherwise.
- All weights are approximate in lbs, [kg] unless noted otherwise.

E-mail : info@sipindustries.com
Url : www.sipindustries.com

GENERAL NOTES

10' RADIUS DETECTABLE PLATE

ITEM # : DPR2410

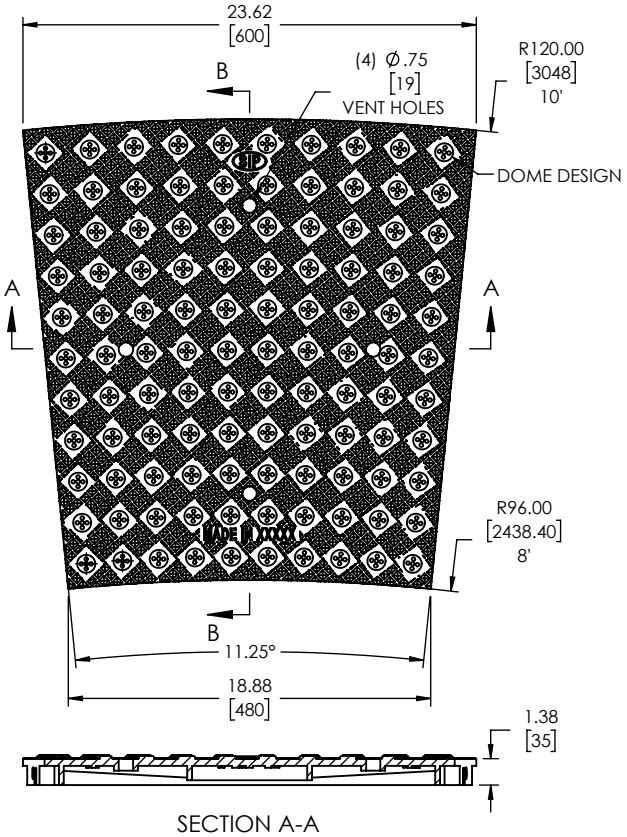

SECTION A-A

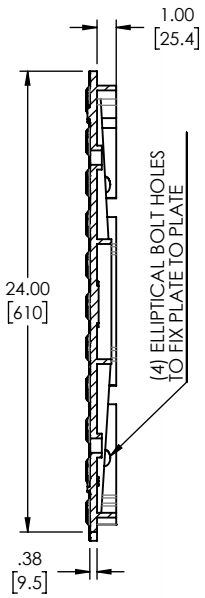

SECTION B-B

Material : Cast Iron, ASTM A48 Class 35B
Dimensions : inch, [mm]
Standards : ADA, ABA, AODA and TS 3.70
Coating : Coated and Uncoated

15' RADIUS DETECTABLE PLATE

ITEM # : DPR2415

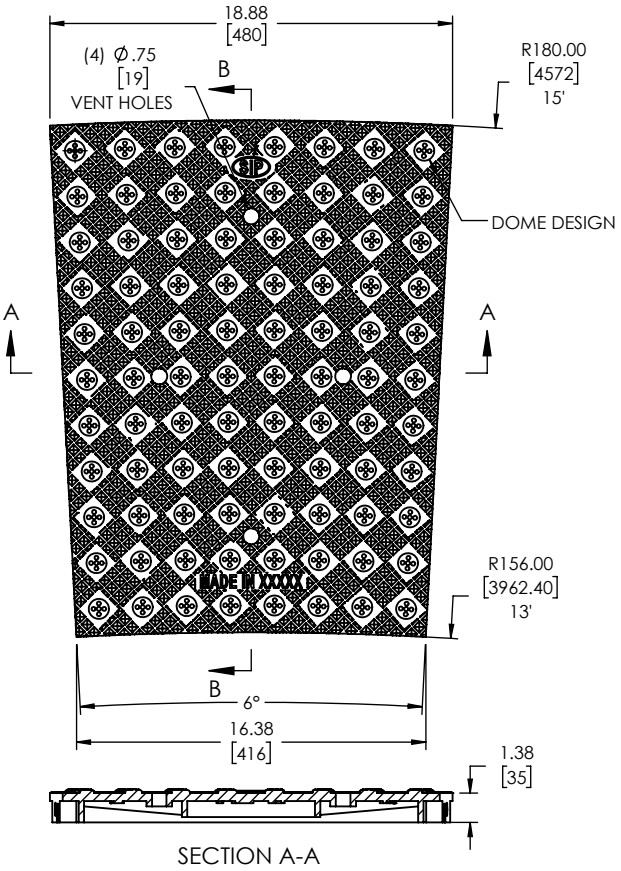

SECTION A-A

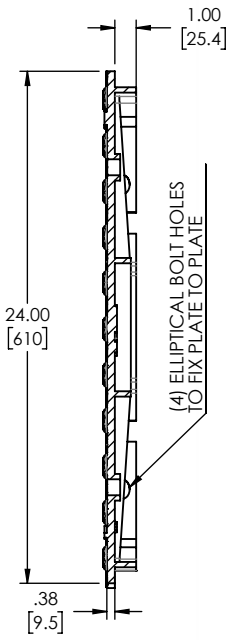

SECTION B-B

Material : Cast Iron, ASTM A48 Class 35B
Dimensions : inch, [mm]
Standards : ADA, ABA, AODA and TS 3.70
Coating : Coated and Uncoated

E-mail : info@sipindustries.com
Url : www.sipindustries.com

ITEM # : DPR2417 — 17.50' RADIUS DETECTABLE PLATE

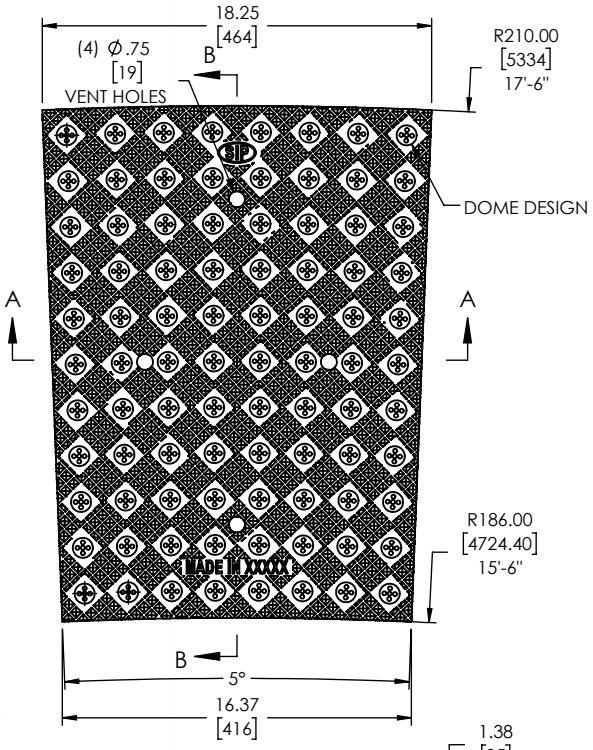

SECTION A-A

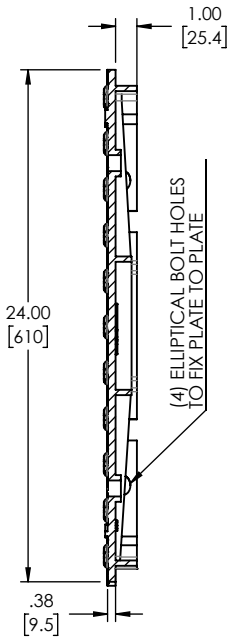

SECTION B-B

Material : Cast Iron, ASTM A48 Class 35B
Dimensions : inch, [mm]
Standards : ADA, ABA, AODA and TS 3.70
Coating : Coated and Uncoated

ITEM # : DPR2420 — 20' RADIUS DETECTABLE PLATE

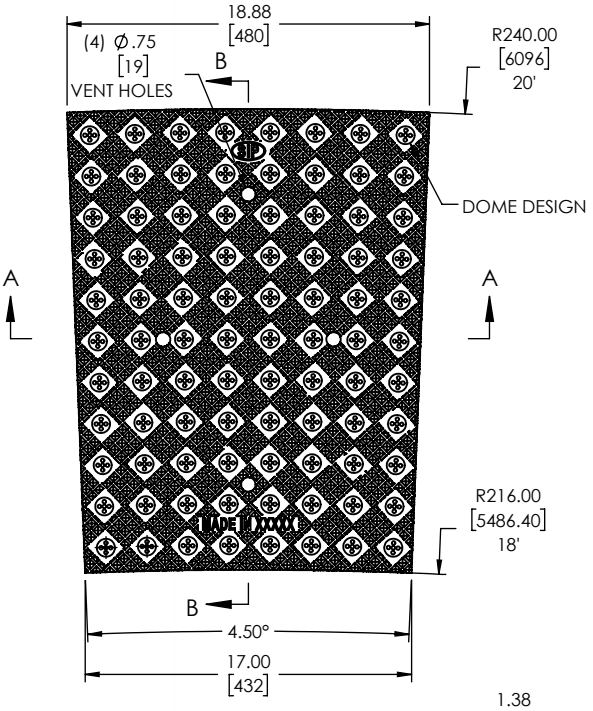

SECTION A-A

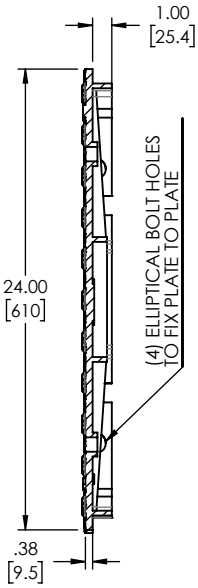

SECTION B-B

Material : Cast Iron, ASTM A48 Class 35B
Dimensions : inch, [mm]
Standards : ADA, ABA, AODA and TS 3.70
Coating : Coated and Uncoated

25' RADIUS DETECTABLE PLATE

ITEM # : DPR2425

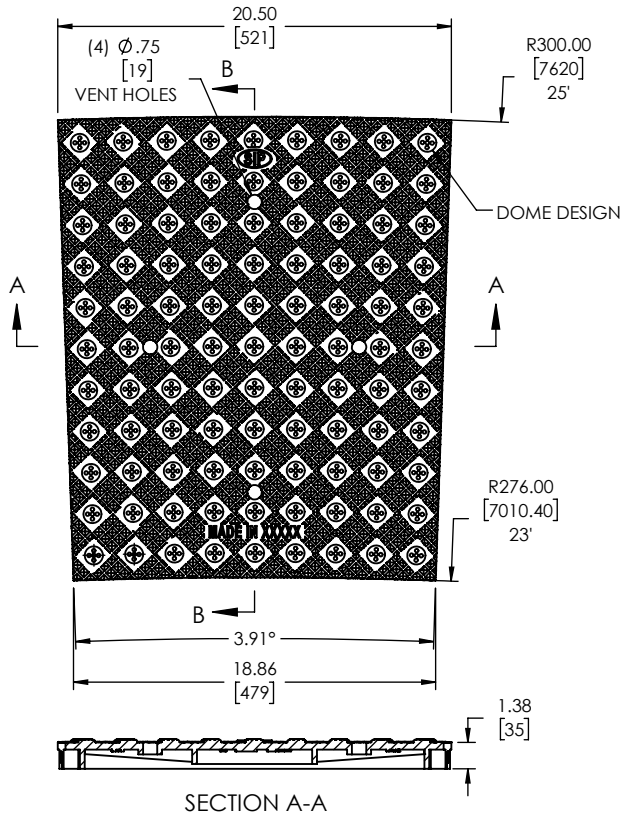

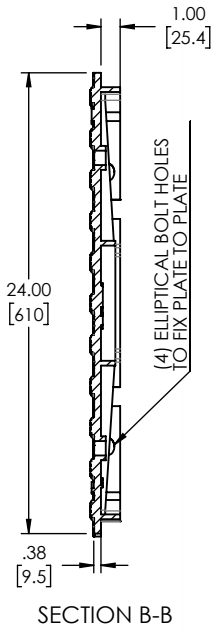

Material : Cast Iron, ASTM A48 Class 35B
Dimensions : inch, [mm]
Standards : ADA, ABA, AODA and TS 3.70
Coating : Coated and Uncoated

30' RADIUS DETECTABLE PLATE

ITEM # : DPR2430

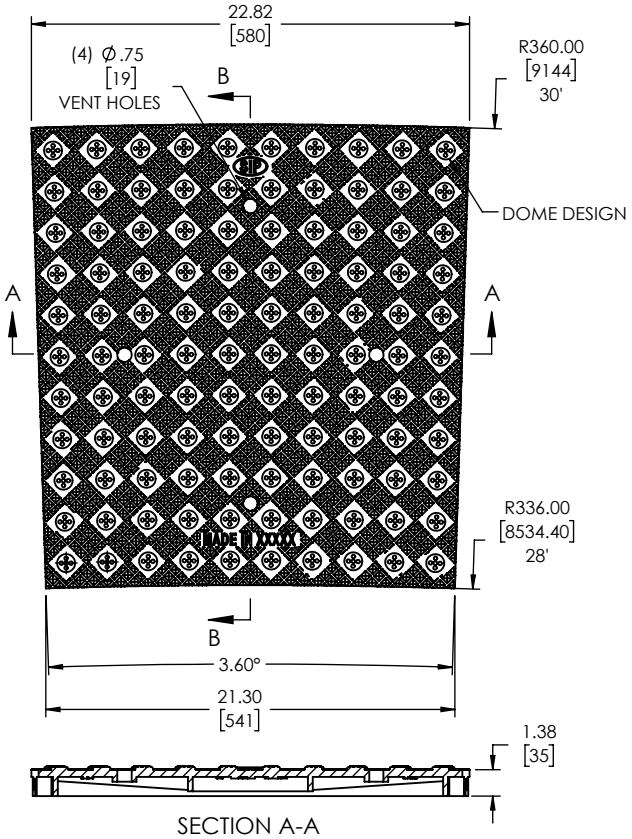

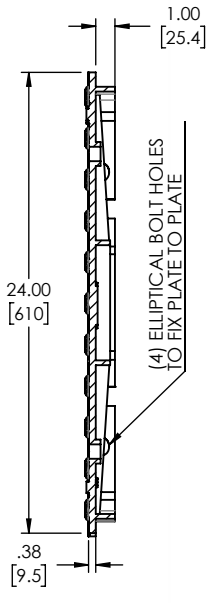

Material : Cast Iron, ASTM A48 Class 35B
Dimensions : inch, [mm]
Standards : ADA, ABA, AODA and TS 3.70
Coating : Coated and Uncoated

E-mail : info@sipindustries.com
Url : www.sipindustries.com

ITEM # : DPR2435 — 35' RADIUS DETECTABLE PLATE

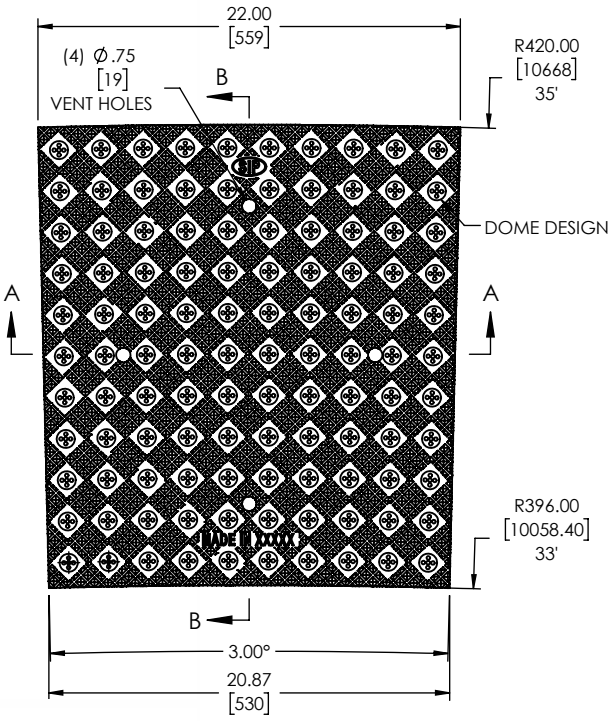

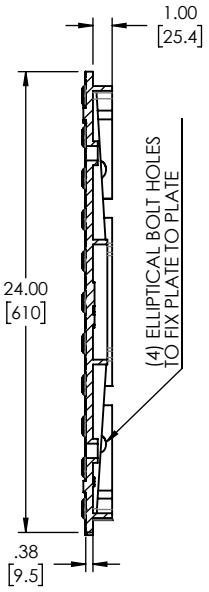

SECTION B-B

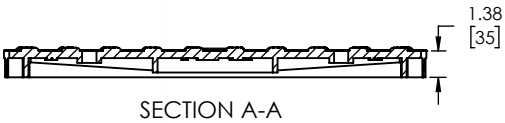

SECTION A-A

Material : Cast Iron, ASTM A48 Class 35B
Dimensions : inch, [mm]
Standards : ADA, ABA, AODA and TS 3.70
Coating : Coated and Uncoated

ITEM # : DP2418 — 18" X 24" DETECTABLE PLATE

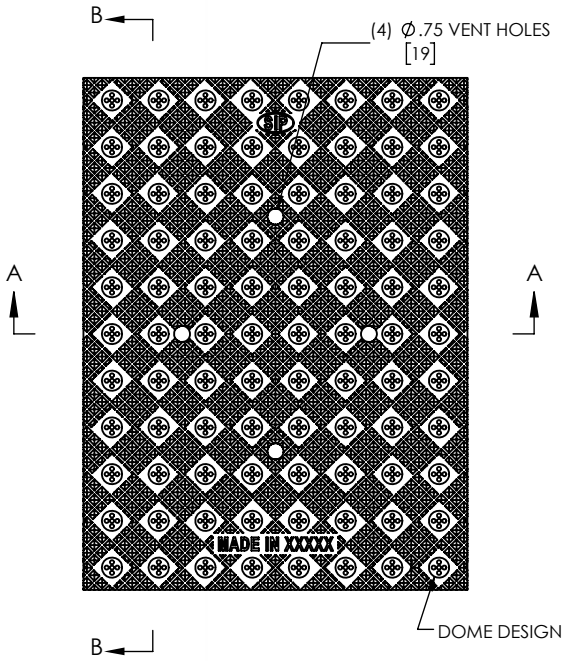

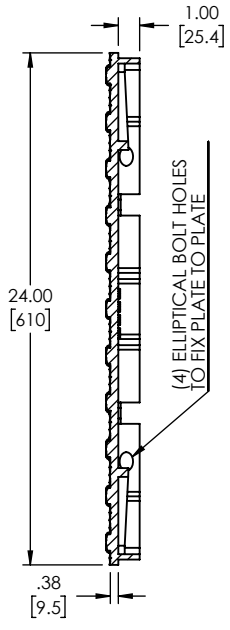

SECTION B-B

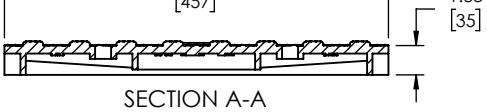

SECTION A-A

Material : Cast Iron, ASTM A48 Class 35B
Dimensions : inch, [mm]
Standards : ADA, ABA, AODA and TS 3.70
Coating : Coated and Uncoated

24" X 24" DETECTABLE PLATE — ITEM # : DP2424

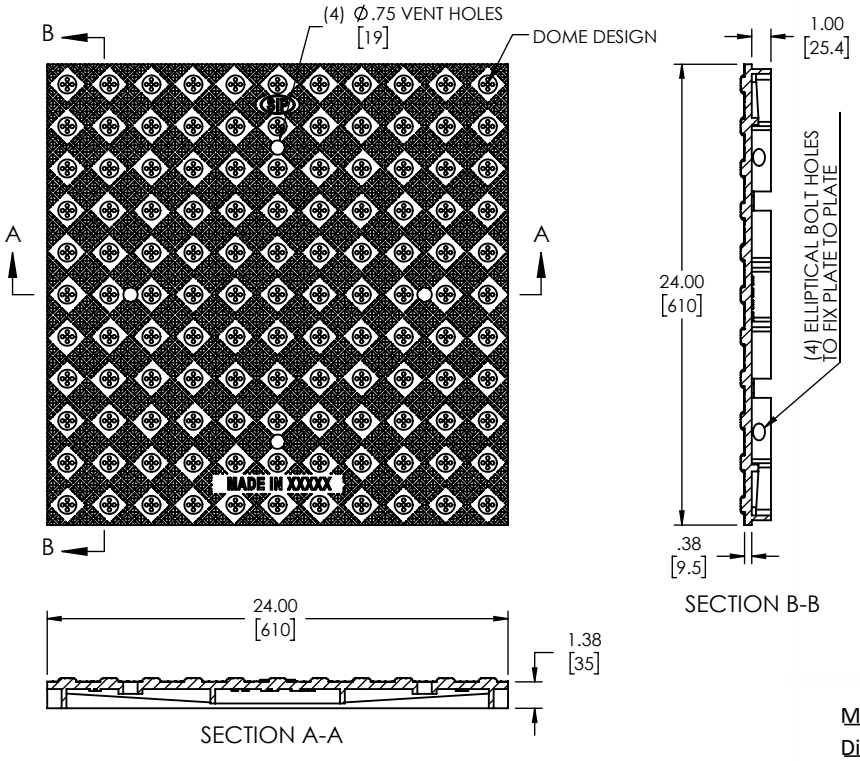

Material : Cast Iron, ASTM A48 Class 35B
Dimensions : inch, [mm]
Standards : ADA, ABA, AODA and TS 3.70
Coating : Coated and Uncoated

30" X 24" DETECTABLE PLATE — ITEM # : DP2430

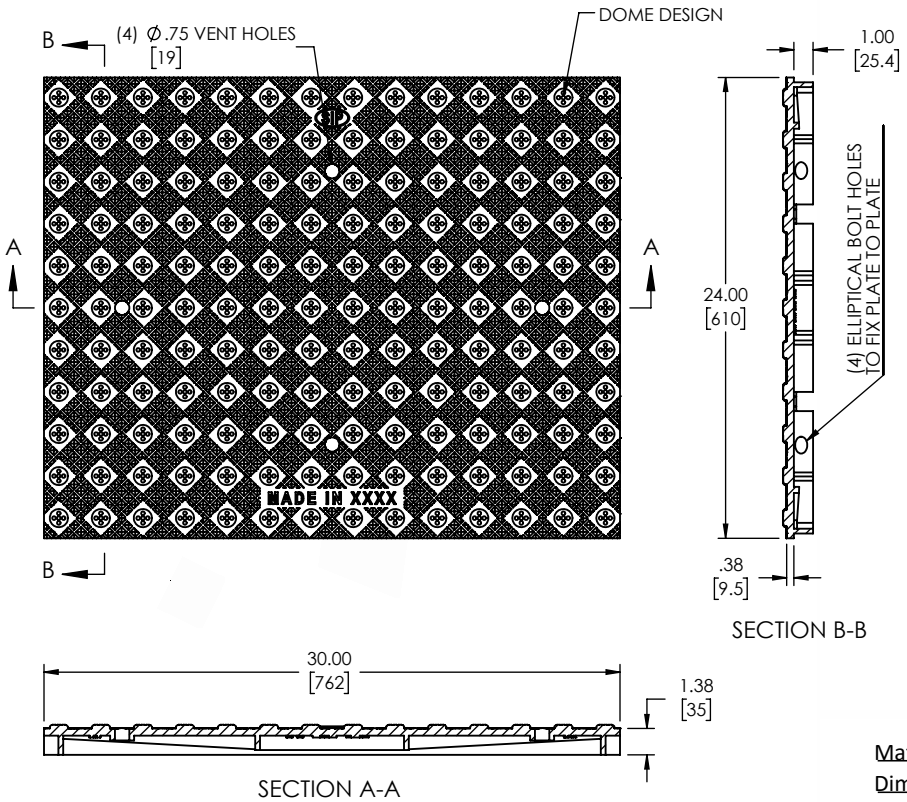

Material : Cast Iron, ASTM A48 Class 35B
Dimensions : inch, [mm]
Standards : ADA, ABA, AODA and TS 3.70
Coating : Coated and Uncoated

E-mail : info@sipindustries.com
Url : www.sipindustries.com

GENERAL NOTES

SIP Industries

Quality Manufacturers Since 1960

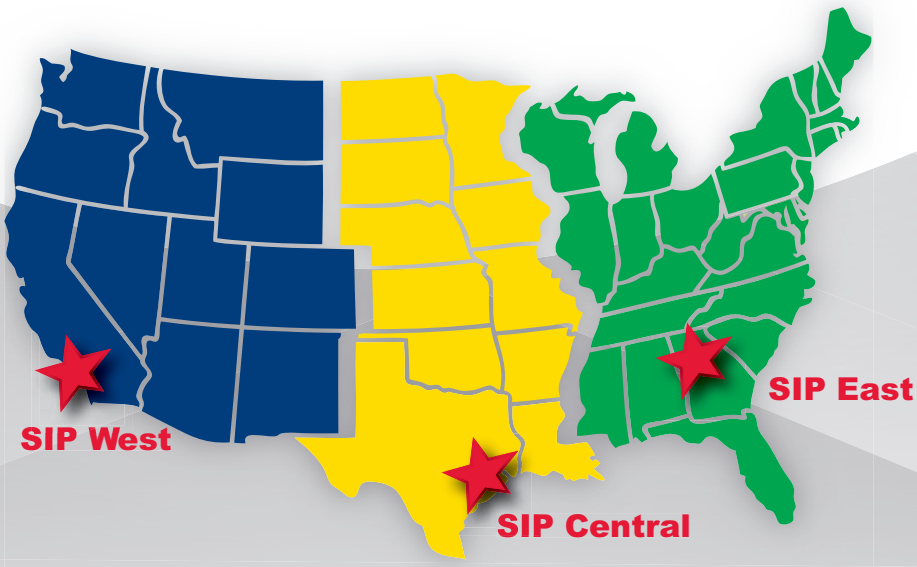

PRODUCT LINE

AWWA DI Fittings & Accessories

- C153 Compact MJ Fittings and Acc. 2" – 64"
- C110 Full Body MJ Fittings 2" - 64"
- C153 Trim Tyton® Push-On Fittings 4" - 24"
- C110 Flange Fittings 2" - 64"
- MJ x MJ Adapter for Connecting MJ Bells 3" - 24"
- Stainless Steel & Blue T-Bolts
- Made in India, China & Mexico
- Bare, Cement, Zinc, FBE & Other Linings

Joint Restraint System

- EZD Joint Restraint for DI Pipe 3" - 48"
- EZDTP Joint Restraint Tandem for DI Pipe 3" - 48"
- EZDPTP Joint Restraint for Push-On Joints DI Pipe 3" - 48"
- Ductile Iron Retainer Glands 3" - 30"
- FAR / FAH Flange Adapter for DI Pipe 3" - 48"
- EZFA Restrained Flange Adapter for DI and PVC Pipe 3" - 36"
- EZPVC Joint Restraint for PVC Pipe 3" - 36"
- ULTRA Joint Restraint for PVC Pipe 4" - 12"
- EZPVCPTP Joint Restraint for Push-On Joints PVC Pipe 14" - 36"
- PTPVC Pipe to Pipe Restraint 4" - 48"
- PTPDF Pipe to MJ Fittings Restraint 4" - 48"
- PTPFC Pipe to PVC Fittings Restraint 4" - 12"
- Made in China & USA
- EZ Shield or Shop Coating

Municipal Construction Castings

- Manhole Rings and Cover
- Frames and Grates
- Valve Boxes and Service Boxes
- Water Meter Covers and Boxes
- Cleanout and Monument Boxes
- Detectable Warning Plates
- Extension Rings
- Trench Grates and Tree Grates
- Made in India & USA

Fabrication Products for DI Pipe

- High Hub Flanges Class 150 and 250. 3" - 64"
- Threaded Bell Flanges 3" - 48"
- Anchor Flanges 3" - 60"
- Filler Flanges 4" - 30"

Other Products and Services

- All Thread Rod
- Pipe Lube and Hydraulic Cement
- Socket Clamps and Lugs
- Flange Packs
- OEM Castings

60 YEARS OF SERVICE

★ ★ ★

SIP INDUSTRIES
SERAMPORE
SINCE 1960

SIP CORPORATE 8876 Gulf Freeway, Suite 500, Houston, TX 77017
SIP CENTRAL 2900 Patio Drive, Houston, TX 77017
SIP EAST 600 Rayloc Drive, Atlanta, GA 30336
SIP WEST 8333 Almeria Avenue, Fontana, CA 92335

Phone: 877-921-6111 or 713-923-6111 | Fax: 713-923-6114 | www.sipindustries.com | sales@sipindustries.com