TABLE OF CONTENTS

ITEM#	DESCRIPTION	PAGE#
HBMJ	MJ HYDRANT BURIES	Page : HBE 3
MJLR	MJ LONG RADIUS HYDRANT BURIES	Page : HBE 3
HBF	FLANGE HYDRANT BURIES	Page : HBE 4
HYDEXT	FLANGE HYDRANT EXTENSION	Page : HBE 4
POHB	PO HYDRANT BURIES	Page : HBE 5
POLR	PO LONG RADIUS HYDRANT BURIES	Page : HBE 5

- All dimensions are in inches unless noted otherwise.
- All weights are approximate in pounds unless noted otherwise.

E-mail : info@sipindustries.com
Url : www.sipindustries.com

GENERAL NOTES

MJ HYDRANT BURIES

ITEM # : HBMJ

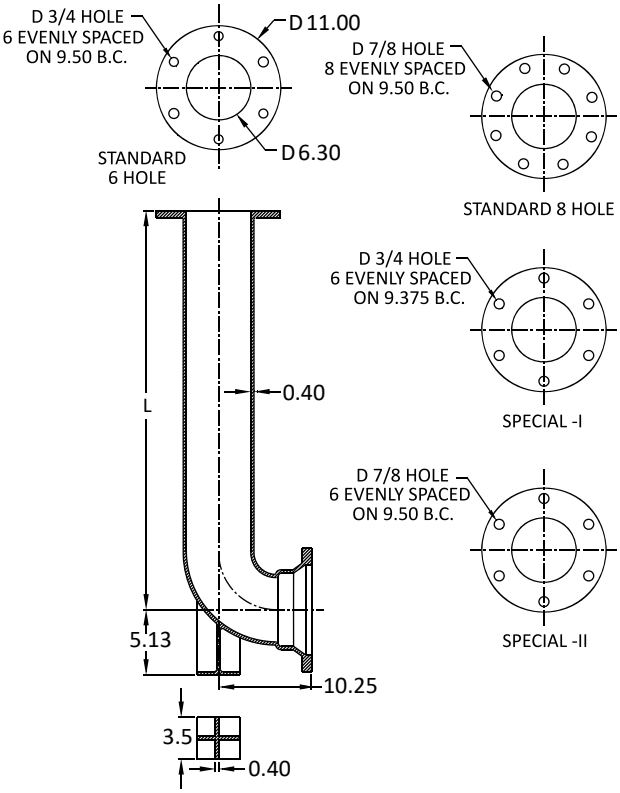

SIZE	L
6 X 16	16.00
6 X 22	22.00
6 X 24	24.00
6 X 30	30.00
6 X 36	36.00
6 X 42	42.00
6 X 48	48.00
6 X 54	54.00

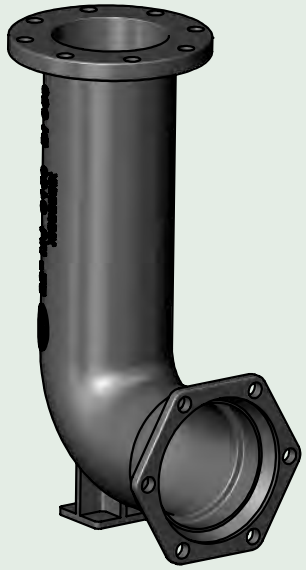

Material : Ductile Iron ASTM A536
Dimensions : All are in Inch

MJ LONG RADIUS HYDRANT BURIES

ITEM # : MJLR

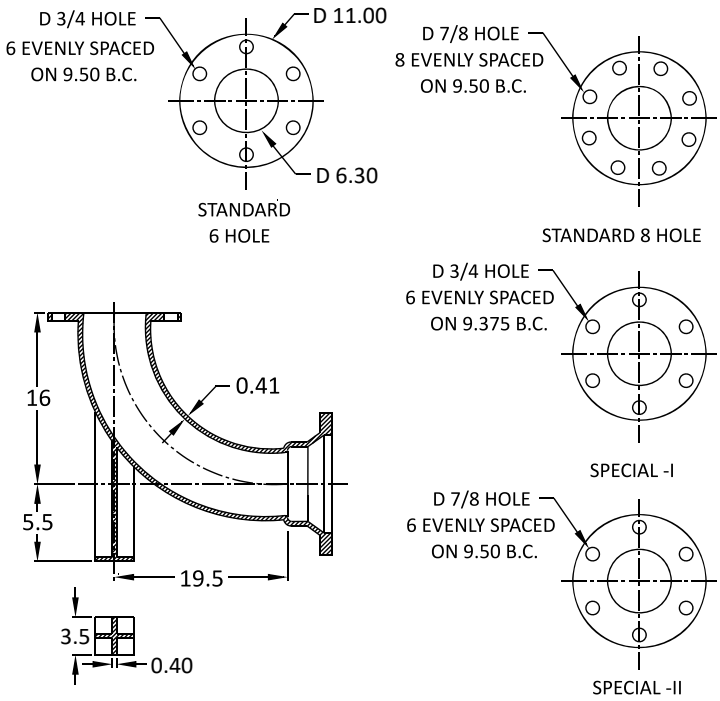

SIZE	RADIUS
6	15

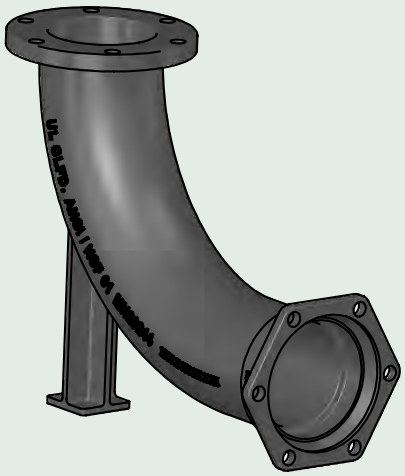

Material : Ductile Iron ASTM A536
Dimensions : All are in Inch

E-mail : info@sipindustries.com
Url : www.sipindustries.com

ITEM # : HBF — FLANGE HYDRANT BURIES

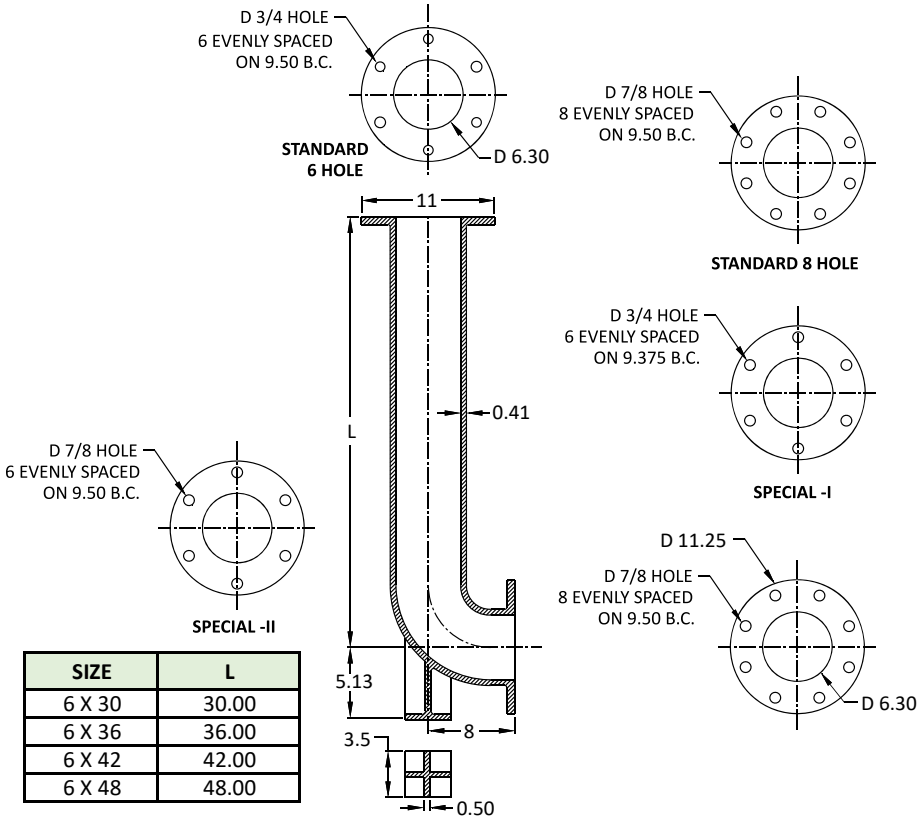

SIZE	L
6 X 30	30.00
6 X 36	36.00
6 X 42	42.00
6 X 48	48.00

Material : Ductile Iron ASTM A536
Dimensions : All are in Inch

ITEM # : HYDEXT — FLANGE HYDRANT EXTENSION

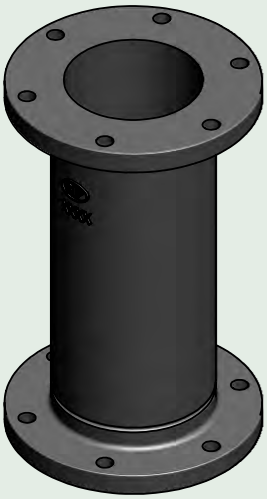

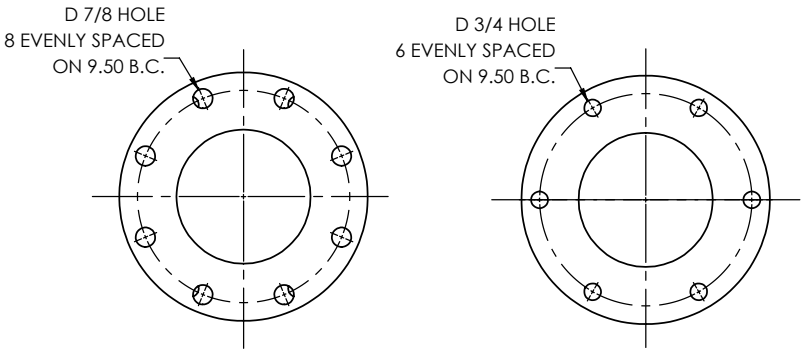

SIZE	L
6 X 4	4
6 X 6	6
6 X 8	8
6 X 10	10
6 X 12	12
6 X 14	14
6 X 16	16
6 X 18	18
6 X 20	20
6 X 22	22
6 X 24	24
6 X 26	26
6 X 28	28
6 X 30	30
6 X 36	36

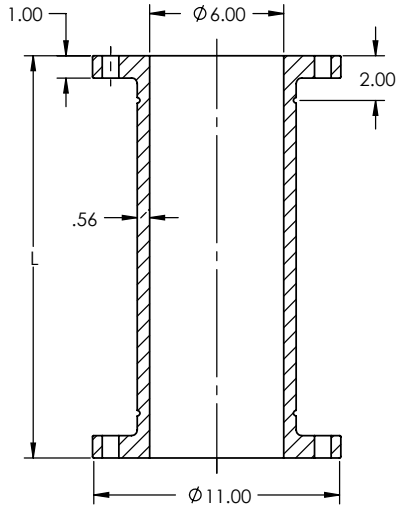

Material : Cast Iron, ASTM A48 Class 30B
Dimensions : All are in Inch

PO HYDRANT BURIES

ITEM # : POHB

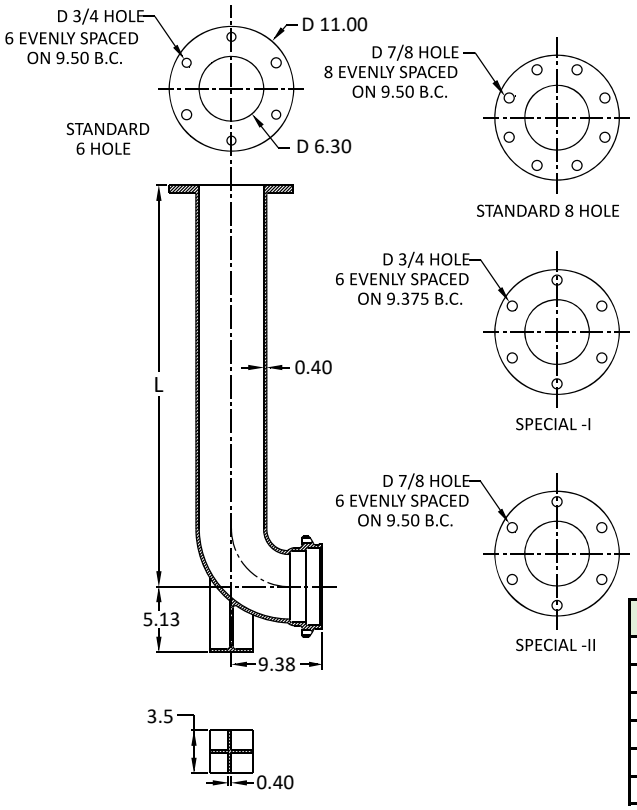

SIZE	L
6 X 24	24.00
6 X 30	30.00
6 X 36	36.00
6 X 42	42.00
6 X 48	48.00
6 X 54	54.00

Material : Ductile Iron ASTM A536
Dimensions : All are in Inch

PO LONG RADIUS HYDRANT BURIES

ITEM # : POLR

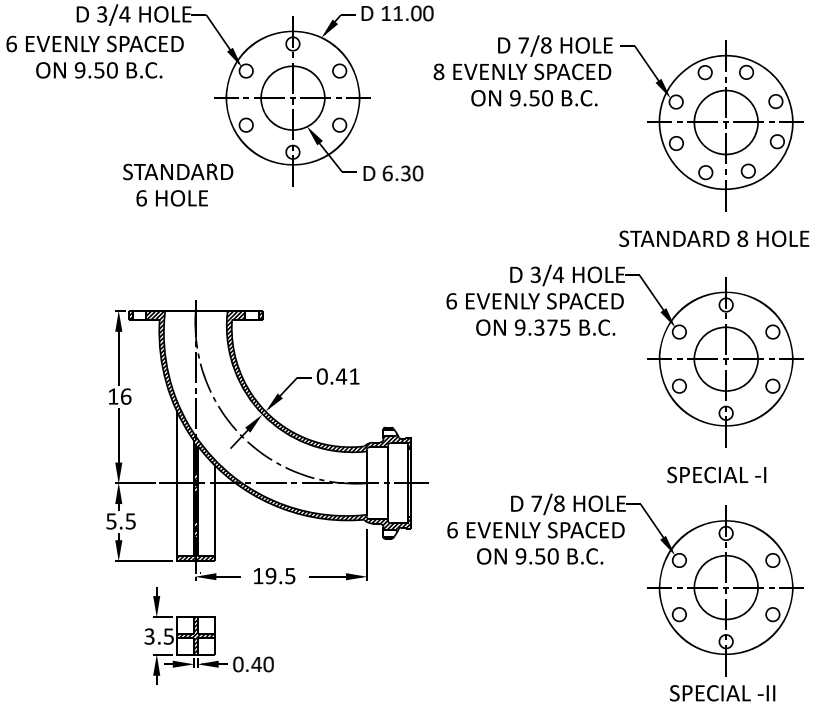

SIZE	RADIUS
6	15

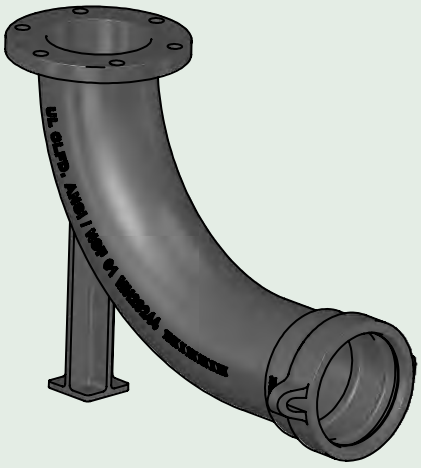

Material : Ductile Iron ASTM A536
Dimensions : All are in Inch

E-mail : info@sipindustries.com
Url : www.sipindustries.com

GENERAL NOTES

SIP Industries

Quality Manufacturers Since 1960

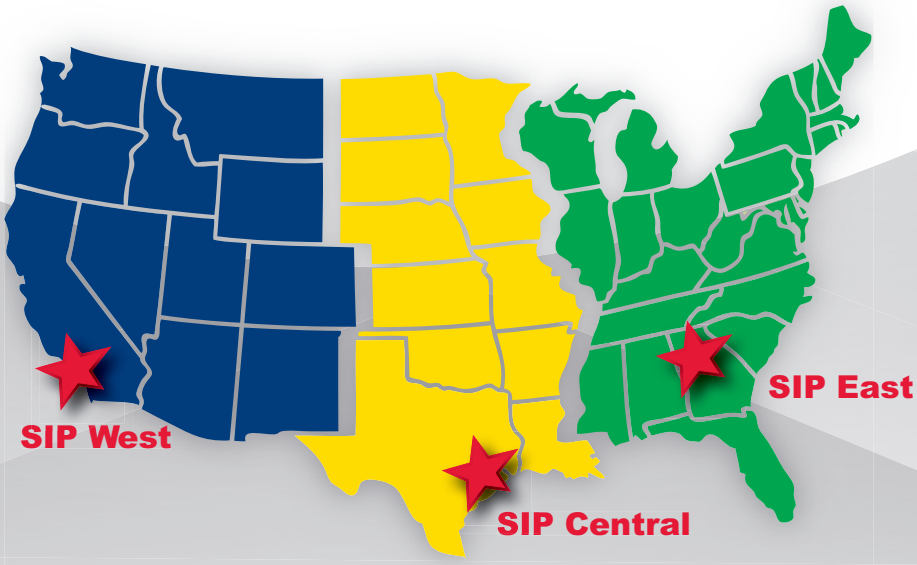

PRODUCT LINE

AWWA DI Fittings & Accessories

- C153 Compact MJ Fittings and Acc. 2" – 64"
- C110 Full Body MJ Fittings 2" - 64"
- C153 Trim Tyton® Push-On Fittings 4" - 24"
- C110 Flange Fittings 2" - 64"
- MJ x MJ Adapter for Connecting MJ Bells 3" - 24"
- Stainless Steel & Blue T-Bolts
- Made in India, China & Mexico
- Bare, Cement, Zinc, FBE & Other Linings

Joint Restraint System

- EZD Joint Restraint for DI Pipe 3" - 48"
- EZDTP Joint Restraint Tandem for DI Pipe 3" - 48"
- EZDPTP Joint Restraint for Push-On Joints DI Pipe 3" - 48"
- Ductile Iron Retainer Glands 3" - 30"
- FAR / FAH Flange Adapter for DI Pipe 3" - 48"
- EZFA Restrained Flange Adapter for DI and PVC Pipe 3" - 36"
- EZPVC Joint Restraint for PVC Pipe 3" - 36"
- ULTRA Joint Restraint for PVC Pipe 4" - 12"
- EZPVCPTP Joint Restraint for Push-On Joints PVC Pipe 14" - 36"
- PTPVC Pipe to Pipe Restraint 4" - 48"
- PTPDF Pipe to MJ Fittings Restraint 4" - 48"
- PTPFC Pipe to PVC Fittings Restraint 4" - 12"
- Made in China & USA
- EZ Shield or Shop Coating

Municipal Construction Castings

- Manhole Rings and Cover
- Frames and Grates
- Valve Boxes and Service Boxes
- Water Meter Covers and Boxes
- Cleanout and Monument Boxes
- Detectable Warning Plates
- Extension Rings
- Trench Grates and Tree Grates
- Made in India & USA

Fabrication Products for DI Pipe

- High Hub Flanges Class 150 and 250. 3" - 64"
- Threaded Bell Flanges 3" - 48"
- Anchor Flanges 3" - 60"
- Filler Flanges 4" - 30"

Other Products and Services

- All Thread Rod
- Pipe Lube and Hydraulic Cement
- Socket Clamps and Lugs
- Flange Packs
- OEM Castings

60 YEARS OF SERVICE

SIP INDUSTRIES
SERAMPORE
SINCE 1960

SIP CORPORATE 8876 Gulf Freeway, Suite 500, Houston, TX 77017
SIP CENTRAL 2900 Patio Drive, Houston, TX 77017
SIP EAST 600 Rayloc Drive, Atlanta, GA 30336
SIP WEST 8333 Almeria Avenue, Fontana, CA 92335

Phone: 877-921-6111 or 713-923-6111 | Fax: 713-923-6114 | www.sipindustries.com | sales@sipindustries.com